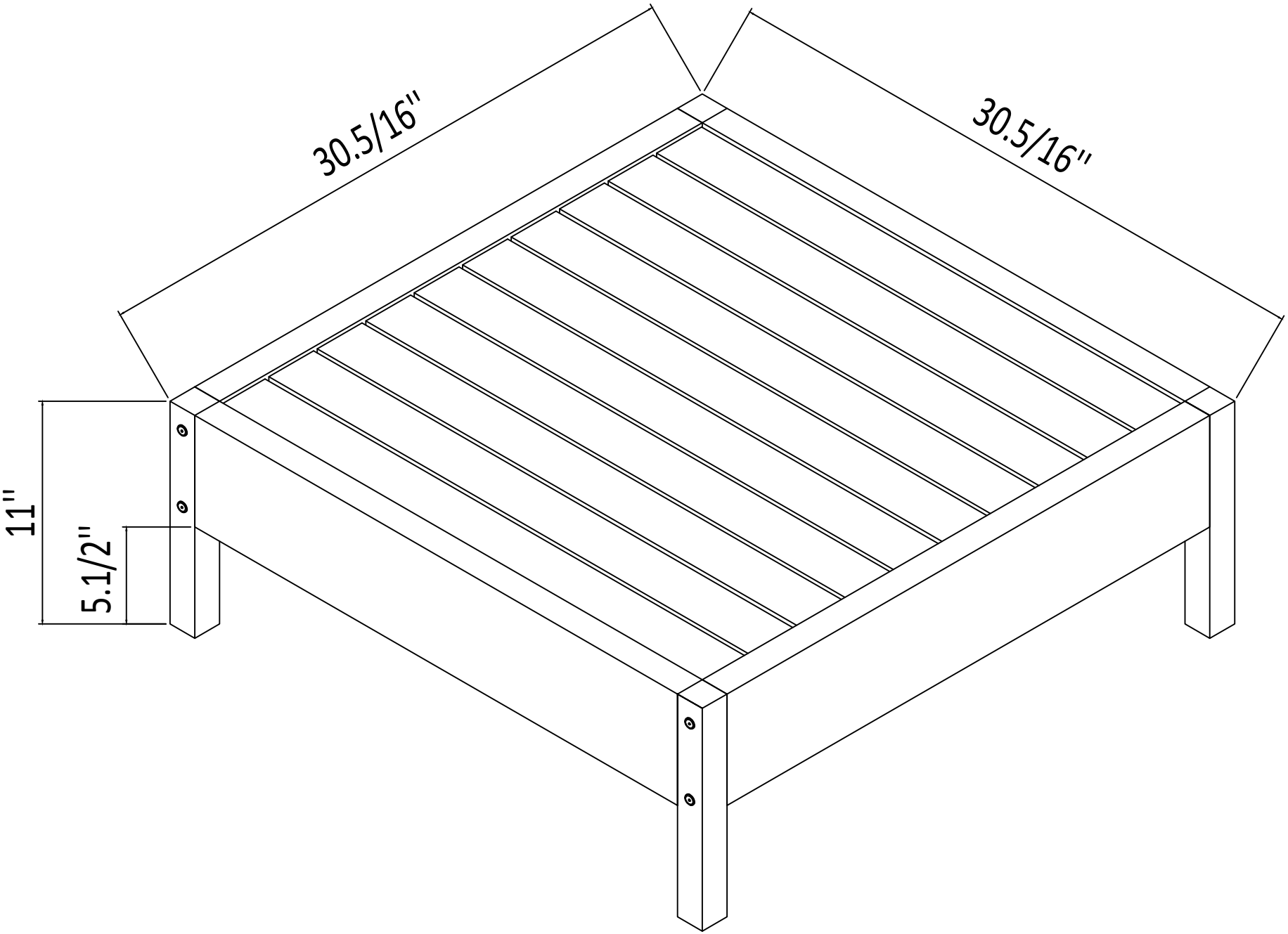
30.5/16"
30.5/16"
11"
5.1/2"